Craftcamp

Free 3´x 8´ Garden Bed Plan

Free vs. Premium Plan: What's the Difference?

We offer both free and premium versions of our detailed shed plans, designed to fit your needs and budget. Check out the table below to see the key differences and choose the plan that's right for you:

Features	Free Plan	Premium Plan
Metric measurements	X	✓
Illustrations per Step	Limited	Every Step
Print Ready Format	X	✓
Step-by-Step Instructions	Basic	Comprehensive
Full Materials & Cutting List	X	✓
Additional Illustrations	X	✓
Additional Blueprints	X	✓
Tools List	X	✓
Fastening Elements List	X	✓
Technical Support	X	✓

Try Premium Risk-Free

30-day refund policy with no questions asked.

3´ x 8´ garden bed shopping list				
	Unit	***Qty***	***Size***	***Note***
Lumber (2x2)	pcs	8	8´	Joists
Lumber (2x4)	pcs	16	8´	Studs, Joists, Bottom plates, Cross braces
Lumber (1x6)	pcs	14	8´	Joists, Floor joists
Landscape fabric	sq.ft.	52		

Size & Dimensions

front

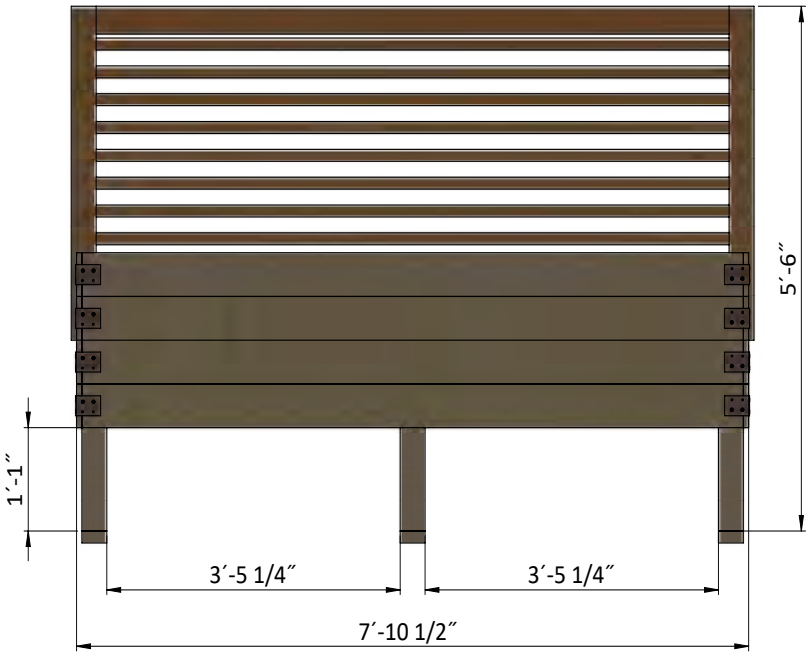

side

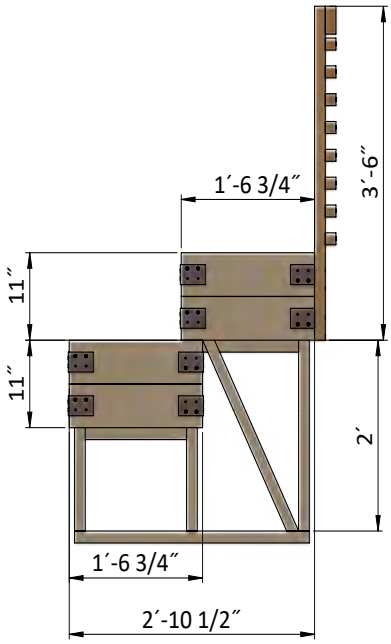

3D

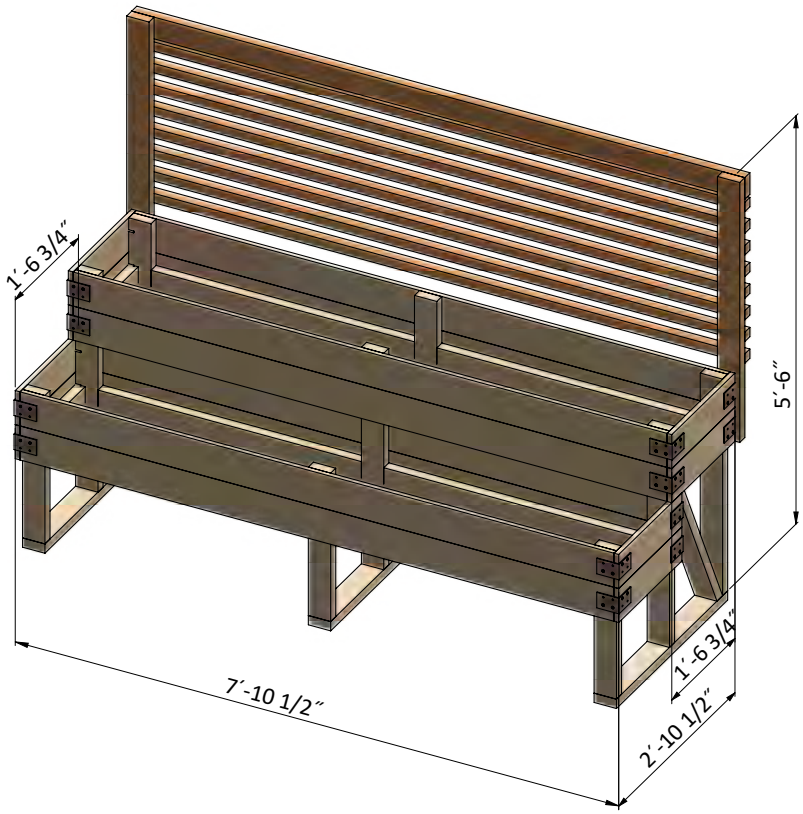

STEP 1

Assemble Main Frame

1.1. Assemble the main frame using 2x4 lumber. You will need six boards cut to 2´-11˝ and three boards cut to 2´ that will be the studs, six boards cut to 1´-2 1/4˝ that will be the joists, three boards cut to 2´-9˝ that will be the bottom plates and two boards cut to 2´-3 1/2˝ that will be the cross braces.

1.2. You will need 3˝ wood screws for fastening the main frame.

1.3. Using a speed square or carpenter's square, check the corners to make sure they are 90°.

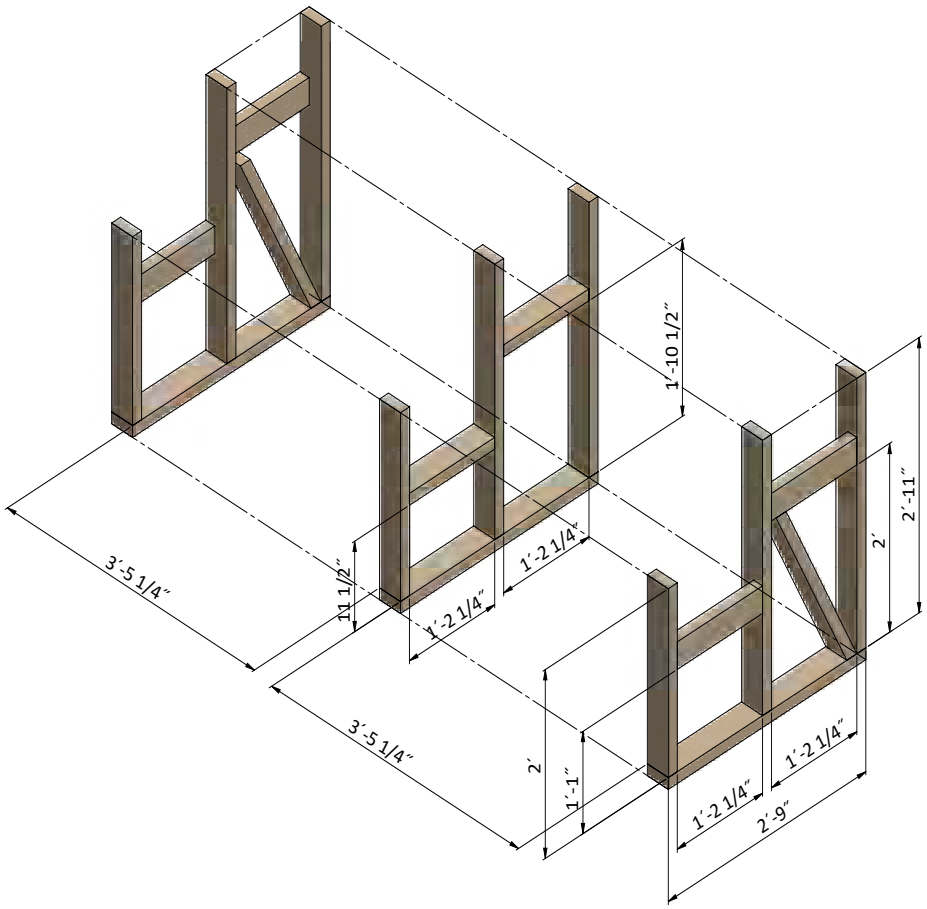

STEP 2

Assemble Main Frame

2.1. Assemble the main frame using 2x4 lumber. You will need eight boards cut to 3´-5 1/4˝ that will be the joists.

2.2. You will need 3" and 5˝ wood screws for fastening the main frame.

2.3. Using a speed square or carpenter's square, check the corners to make sure they are 90°.

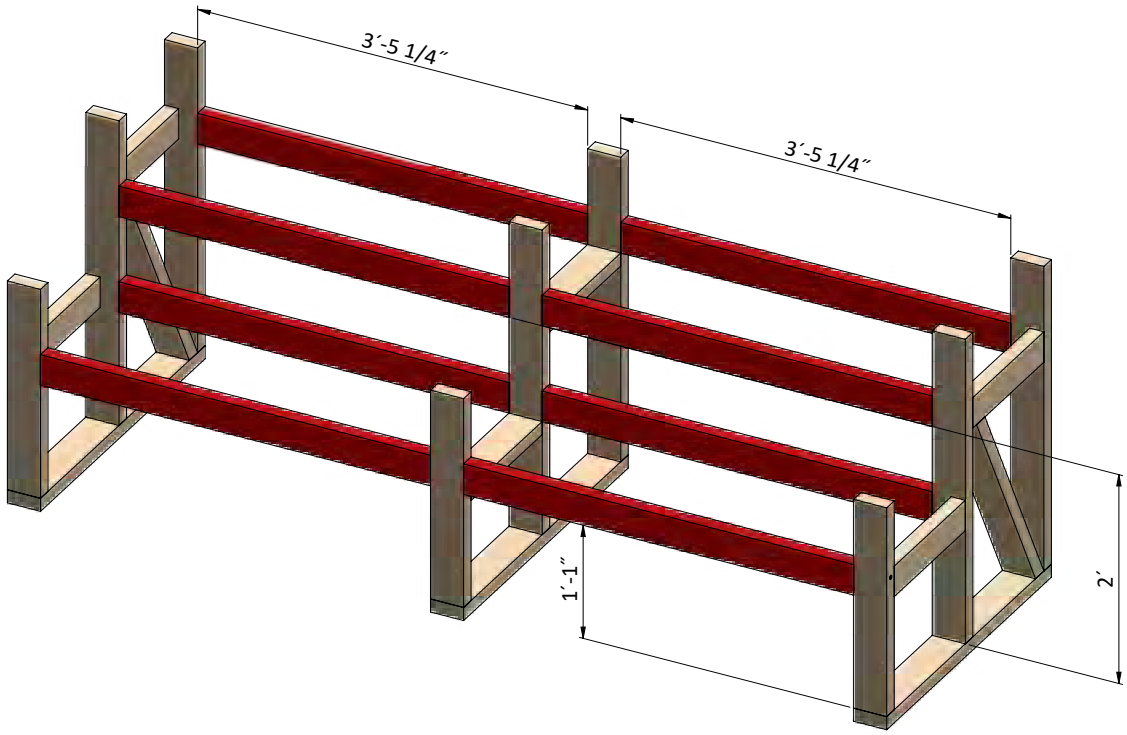

STEP 3

Assemble Main Frame

3.1. Assemble the main frame using 1x6 lumber. You will need four boards cut to 7´-6˝ that will be the floor joists.

3.2. You will need 3˝ wood screws for fastening the main frame.

3.3. Using a speed square or carpenter's square, check the corners to make sure they are 90°.

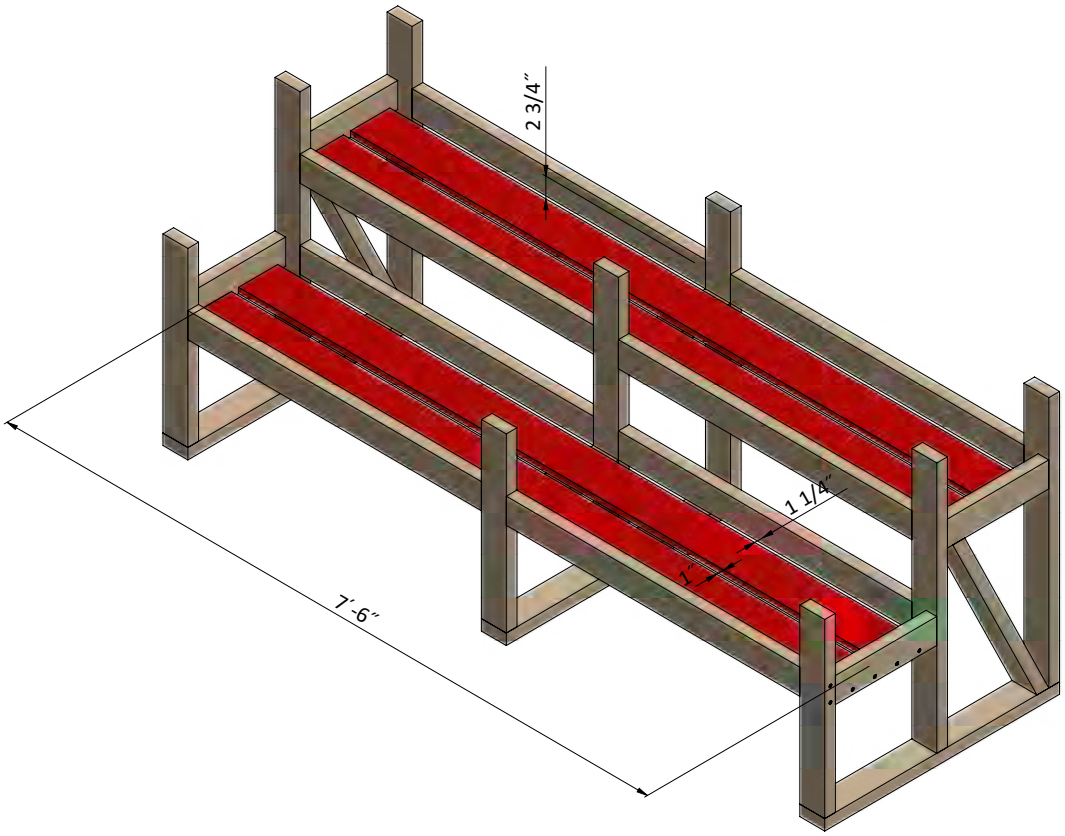

STEP 4

Assemble the Walls

4.1. Assemble the walls using 1x6 lumber. You will need eight boards cut to 7´-9˝ and eight boards cut to 1´-6 3/4˝ that will be the joists.

4.2. Secure the beams with sixteen 3 1/2˝ x 3 1/2˝ corner brackets and 2˝ wood screws.

4.3. Using a speed square or carpenter's square, check the corners to make sure they are 90°.

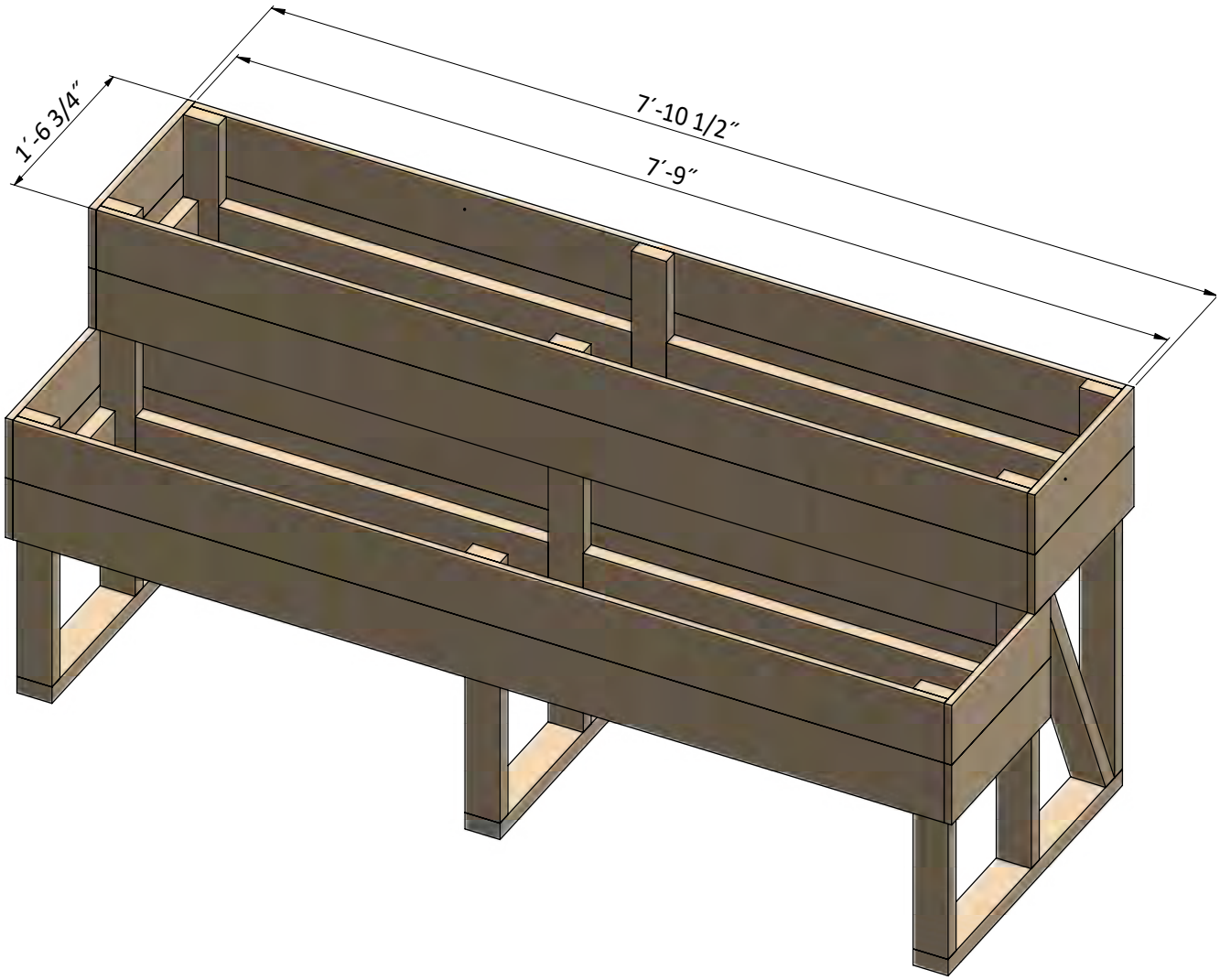

STEP 5

Install Landscape Fabric

5.1. Cover the bottom of garden bed with landscape fabric. You will need 52 sq.ft.

5.2. Fasten landscape fabric for bottom with galvanizated nails 1/2˝.

STEP 6

Assemble the Back Wall

6.1. Assemble the side wall using 2x2 and 2x4 lumber. You will need two boards cut to 3´-6˝ that will be the studs, eight boards cut to 8´ that will be the joists and one board cut to 8´ that will be joist.

6.2. Connect the beams with 2˝ and 3˝ wood screws.

6.3. Using a speed square or carpenter's square, check the corners to make sure they are 90°.

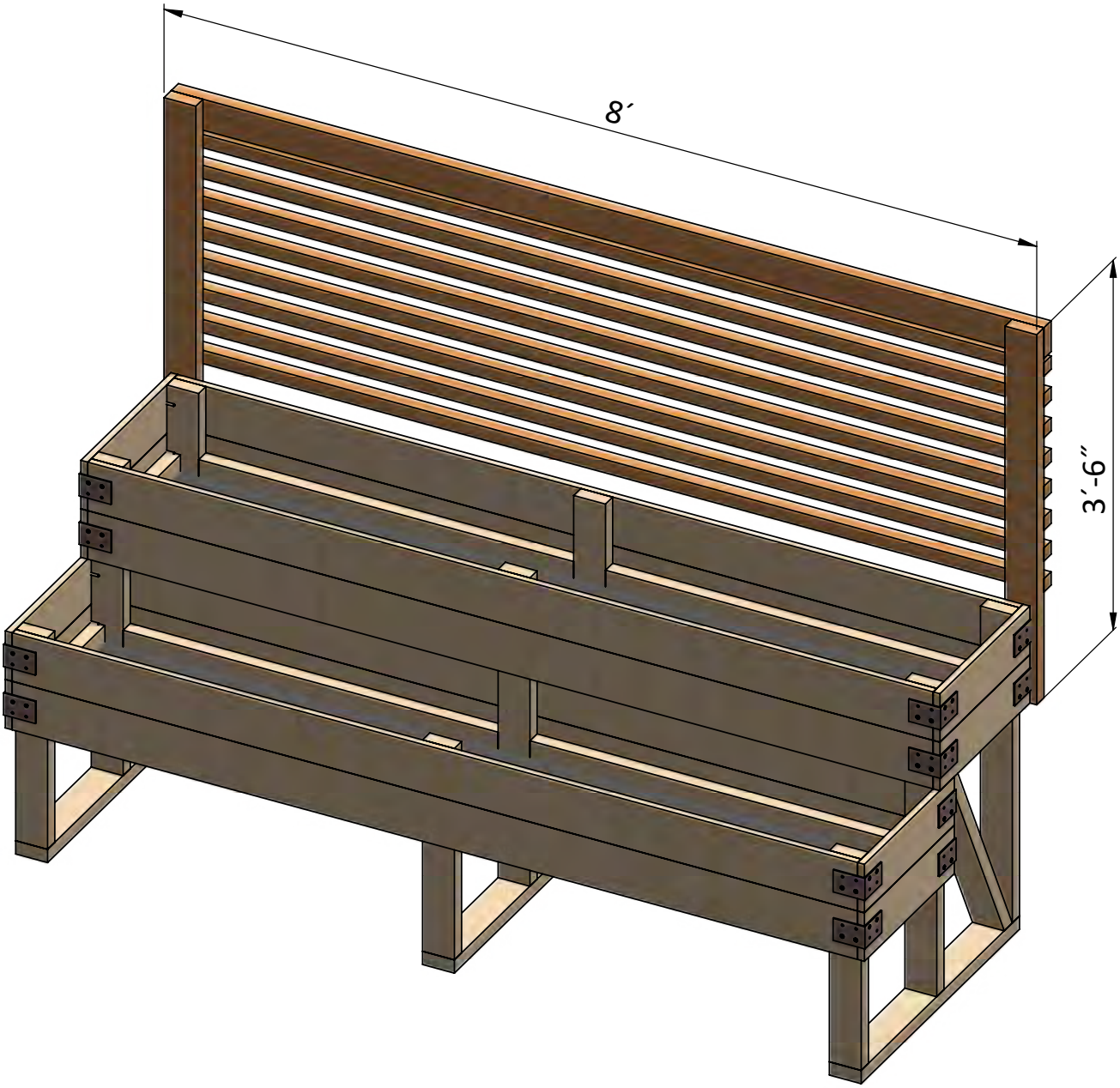

STEP 7

Final Touches

Now that your garden bed is all done, you are ready to decorate it any way you want using your favorite paint, stain, or preservative.

Free vs. Premium Plan: What's the Difference?

We offer both free and premium versions of our detailed shed plans, designed to fit your needs and budget. Check out the table below to see the key differences and choose the plan that's right for you:

Features	Free Plan	Premium Plan
Metric measurements	X	✓
Illustrations per Step	Limited	Every Step
Print Ready Format	X	✓
Step-by-Step Instructions	Basic	Comprehensive
Full Materials & Cutting List	X	✓
Additional Illustrations	X	✓
Additional Blueprints	X	✓
Tools List	X	✓
Fastening Elements List	X	✓
Technical Support	X	✓

Try Premium Risk-Free

30-day refund policy with no questions asked.

For more great **HOW-TO** plans please visit: **https://craft.camp**

Copyright

The text and illustrations that appear here are the exclusive property of craft.camp and are protected by federal copyright laws. The duplication, sale or distribution of any portion of these plans without prior written consent from the original designer will be subject to the appropriate penalties for copyright infringement. Sharing this plan on the web is only permitted with an indicated original source: https://craft.camp